ENERGY & FUEL CONSERVERS

STEAM TRAPS
BALL VALVES

TÜV NABCB QM 002

UNISON VALVES PVT. LTD.

QUALITY POLICY

of Unison Valves Pvt Ltd is to achieve optimum customer satisfaction by integrating quality systems and continuously developing Valves and related products to meet enhanced markets.

UNISON VALVES PVT LTD

TÜV NABCB QM 002

One Piece Design Screwed Ball Valve (FB)

Design Standard : IS 9890-1981
Pressure Testing : BS 6755 Part I/API 598/IS 6157-1981
Screwed Dimensions : ANSI B 1.20.1/IS 554/BSEN10226-1

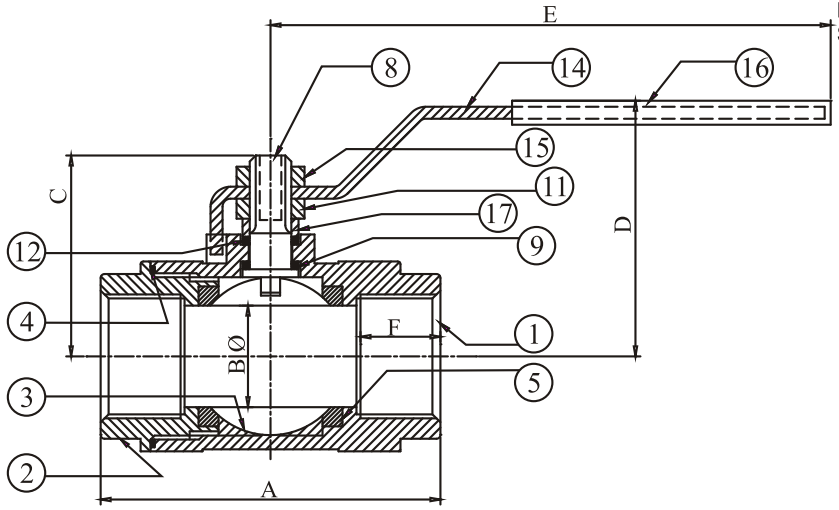

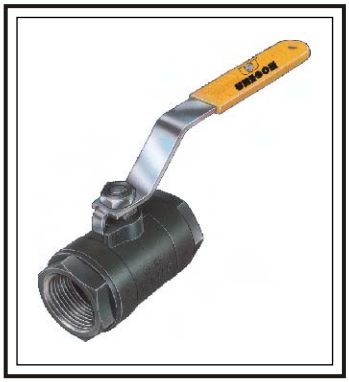

17	GLAND	01	CARBON STEEL	AISI 304	AISI 304
16	SLEEVE	01	P.V.C.	P.V.C.	P.V.C.
15	LEVER NUT	01	CARBON STEEL	AISI 304	AISI 304
14	LEVER	01	CARBON STEEL	SS / CARBON STEEL	SS / CARBON STEEL
12	GLAND PACKING	01	P.T.F.E.	P.T.F.E.	P.T.F.E.
11	GLAND NUT	01	CARBON STEEL	AISI 304	AISI 304
09	STEM SEAL	01	P.T.F.E.	P.T.F.E.	P.T.F.E.
08	STEM	01	AISI 304	AISI 304	AISI 316
05	SEAT	02	P.T.F.E.	P.T.F.E.	P.T.F.E.
04	BODY GASKET	01	P.T.F.E.	P.T.F.E.	P.T.F.E.
03	BALL	01	AISI 304 / CF8	AISI 304 / CF8	AISI 316 / CF8M
02	BODY NUT	01	ASTM A216 GR WCB	ASTM A 351 GR CF8	ASTM A 351 GR CF8M
01	BODY	01	ASTM A216 GR WCB	ASTM A 351 GR CF8	ASTM A 351 GR CF8M
NO.	COMP. NAME	QTY.	MATERIAL OF CONSTRUCTION		

SIZES		A	B Ø	C	D	E	F
1/4"	6	60	10	35	58	110	15
3/8"	10	60	10	35	58	110	15
1/2"	15	63	12.7	43	62	120	17
¾"	20	73	19	47	65	120	19
1"	25	85	25.4	51	70	150	21
1 1/4"	32	95	31.8	68	83	175	22.5
1½"	40	105	37.5	73	90	175	22.5
2"	50	125	50	83	107	225	26.5

CLASS	TEST	MEDIUM	MIN.	
			PSI	BAR
150	SHELL	HYDROSTATIC	440	31
	SEAT	HYDROSTATIC	300	21
	SEAT	AIR	85	6

DUE TO CONTINUOUS DEVELOPMENT, WE RESERVE THE RIGHT TO CHANGE SPECIFICATIONS WITHOUT NOTICE

UNISON VALVES PVT LTD

TÜV NABCB QM 002

One Piece Design Flanged Ball Valve (FB)

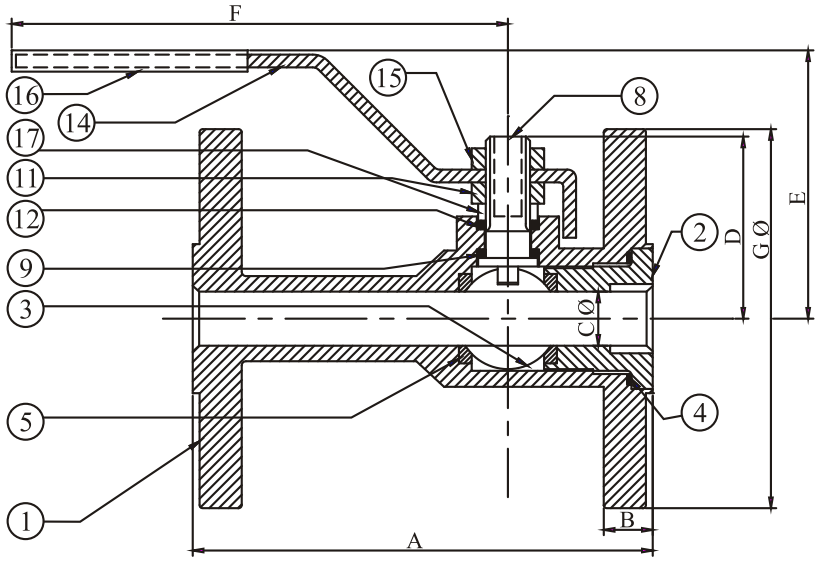

Design Standard : IS 9890-1981
Pressure Testing : BS 6755 Part I/API 598/IS 6157-1981
Flange Dimensions : ANSI B 16.5
Face to Face : ANSI B 16.10

NO.	COMP. NAME	QTY.	MATERIAL OF CONSTRUCTION		
17	GLAND	01	CARBON STEEL	AISI 304	AISI 304
16	SLEEVE	01	P.V.C.	P.V.C.	P.V.C.
15	LEVER NUT	01	CARBON STEEL	AISI 304	AISI 304
14	LEVER	01	CARBON STEEL	SS/ CARBON STEEL	SS/ CARBON STEEL
12	GLAND PACKING	01	P.T.F.E.	P.T.F.E.	P.T.F.E.
11	GLAND NUT	01	CARBON STEEL	AISI 304	AISI 304
09	STEM SEAL	01	P.T.F.E.	P.T.F.E.	P.T.F.E.
08	STEM	01	AISI 304	AISI 304	AISI 316
05	SEAT	02	P.T.F.E.	P.T.F.E.	P.T.F.E.
04	BODY GASKET	01	P.T.F.E.	P.T.F.E.	P.T.F.E.
03	BALL	01	AISI 304 / CF8	AISI 304 / CF8	AISI 316 / CF8 M
02	BODY NUT	01	ASTM A216 GR WCB	ASTM A 351 GR CF8	ASTM A 351 GR CF8M
01	BODY	01	ASTM A216 GR WCB	ASTM A 351 GR CF8	ASTM A 351 GR CF8M

CLASS	TEST	MEDIUM	MIN.	
			PSI	BAR
150	SHELL	HYDROSTATIC	440	31
	SEAT	HYDROSTATIC	300	21
	SEAT	AIR	85	6
300	SHELL	HYDROSTATIC	1095	77
	SEAT	HYDROSTATIC	795	56
	SEAT	AIR	85	6

CLASS 150

SIZES		A	B	C Ø	D	E	F	GØ
1/2"	15	108	11.5	12.7	43	62	120	89
¾"	20	118	11.5	19	47	65	120	98.4
1"	25	127	11.5	25.4	51	70	150	108
1½"	40	165	14.5	37.5	73	91	175	127
2"	50	178	16	50	82	107	225	152.4
3"	80	203	19	75.4	109	128	325	190.5

CLASS 300

SIZES		A	B	C Ø	D	E	F	GØ
1/2"	15	140	14.5	12.7	44	62	120	95
1"	25	165	17.5	25.4	64	78	175	123.8
1½"	40	191	21	37.5	73	100	215	155.6
2"	50	216	22.5	50	92	123	273	165
2 1/2"	65	241	25.5	62	97.5	116	325	190.5
3"	80	283	28.5	75.4	122	137	400	209.5

DUE TO CONTINUOUS DEVELOPMENT, WE RESERVE THE RIGHT TO CHANGE SPECIFICATIONS WITHOUT NOTICE

UNISON VALVES PVT LTD

TÜV NABCB QM 002

Two Piece Design Flanged Ball Valve (FB) (Fire Safe)

Design Standard : IS 9890-1981/ENISO17292/API6D
Testing Standard of Valves : BS 6755 Part I/API 598/IS 6157-1981 & API607
Flange Dimensions : ASME B 16.5 - 2009
Face to Face : ANSI B 16.10/API6D

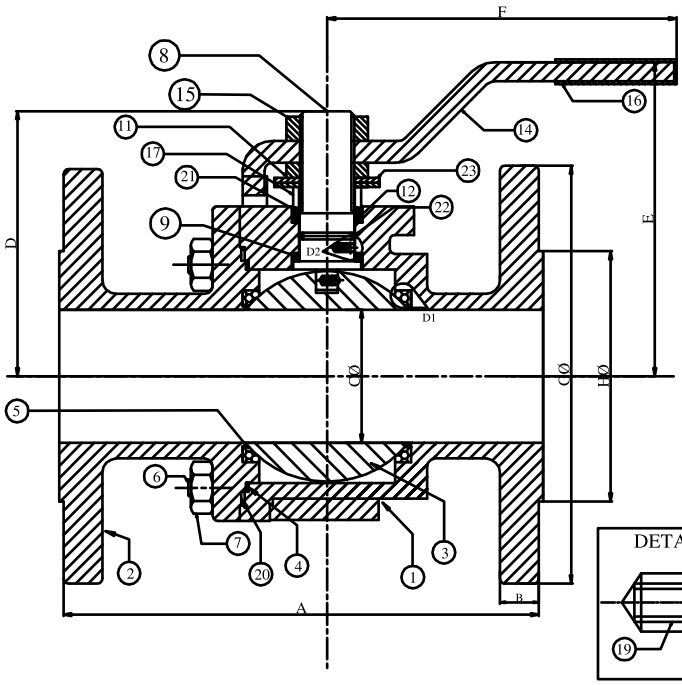

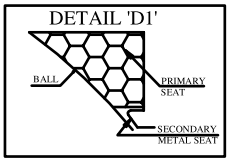

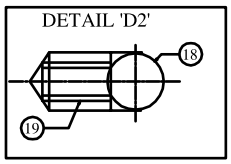

NO.	COMPONANT NAME	QTY.	MATERIAL OF CONSTRUCTION		
23	DISC SPRINGS	2	SPRING STEEL/SS		
22	O RING	1	EPDM/NITRILE/VITON		
21	GLAND PACKING 2	1	PTFE/RPTFE		
20	BODY GASKET 2	1	REINFORCED GRAPHITE		
19	ANTISTATIC BALL	2	SS 304	SS 304	SS 316
18	ANSTATIC SPRING	2	SS 304	SS 304	SS 316
17	GLAND	1	CS	SS 304	SS 304
16	SLEEVE	1	PVC	PVC	PVC
15	LEVER NUT	1	CS	SS 304	SS 304
14	LEVER	1	CS	SS/CS	SS/CS
12	GLAND PACKING	1	REINFORCED GRAPHITE		
11	GLAND NUT	1	CS	SS 304	SS 304
9	STEM SEAL	1	REINFORCED GRAPHITE		
8	STEM	1	SS 304	SS 304	SS 316
7	BODY NUT	4/6/8	CS	SS 304	SS 304
6	BODY BOLT	4/6/8	CS	SS 304	SS 304
5	SEAT	2	PTFE	PTFE	PTFE
4	BODY GASKET 1	1	PTFE	PTFE	PTFE
3	BALL	1	SS 304/CF8	SS 304/CF8	SS 316/CF8M
2	FLANGED END	1	WCB	CF8	CF8M
1	HOUSING WITH F/E	1	WCB	CF8	CF8M

	DIMENSIONS						
SIZES	A	B	C Dia.	D	E	F	G Dia.
1/2"	108	10	13	48	67	120	89
3/4"	118	10.5	19	53	71	120	98.6
1"	127	11.5	25	56	75	150	108
1 1/2"	165	14.5	38	78	99	175	127
2"	178	16	49	98	117	225	152.4
2 1/2"	191	17.5	62	107	126	250	178
3"	203	19.1	74	116	135	325	190.5
4"	229	24	99.5	135	150	400	229
5"	254	24.5	126	168	186	400	254
6"	267	25.5	149	160	190	450	280

CLASS	TEST	MEDIUM	PRESSURE MIN	
			PSI	BAR
150	SHELL	HYDROSTATIC	440	32
	SEAT	AIR	85	6
	SEAT	HYDROSTATIC	300	22

DUE TO CONTINUOUS DEVELOPMENT, WE RESERVE THE RIGHT TO CHANGE SPECIFICATIONS WITHOUT NOTICE

UNISON VALVES PVT LTD

TÜV NABCB QM 002

Two Piece Design Flanged Ball Valve (RB)

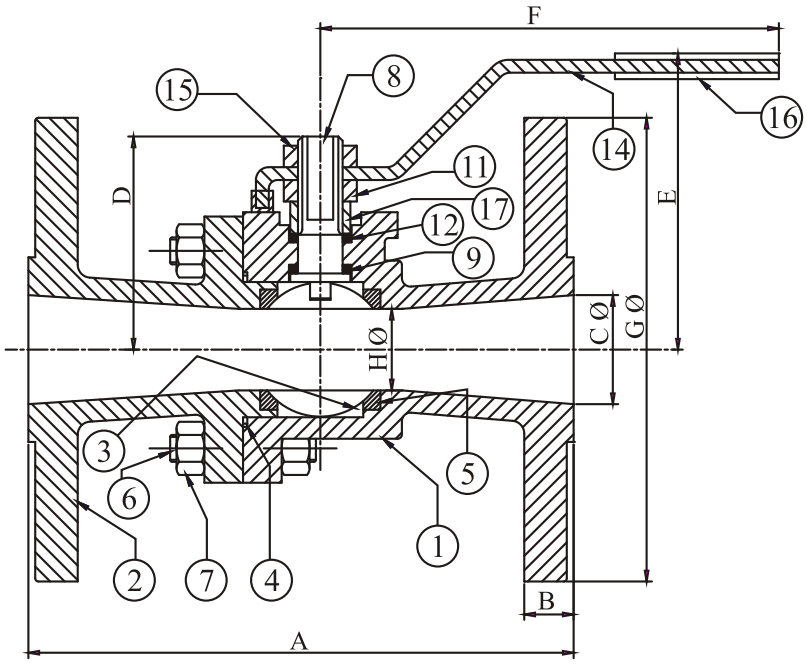

Design Standard : IS 9890-1981
Pressure Testing : BS 6755 Part I/API 598/IS 6157-1981
Flange Dimensions : ANSI B 16.5
Face to Face : ANSI B 16.10

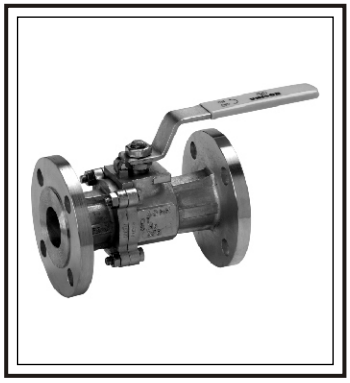

NO.	COMP. NAME	QTY.	MATERIAL OF CONSTRUCTION		
17	GLAND	01	CARBON STEEL	AISI 304	AISI 304
16	SLEEVE	01	P.V.C.	P.V.C.	P.V.C.
15	LEVER NUT	01	CARBON STEEL	AISI 304	AISI 304
14	LEVER	01	CARBON STEEL	S.S/ CARBON STEEL	S.S/ CARBON STEEL
12	GLAND PACKING	01	P.T.F.E.	P.T.F.E.	P.T.F.E.
11	GLAND NUT	01	CARBON STEEL	AISI 304	AISI 304
09	STEM SEAL	01	P.T.F.E.	P.T.F.E.	P.T.F.E.
08	STEM	01	AISI 304	AISI 304	AISI 316
07	BODY NUT	4/6/8	CARBON STEEL	AISI 304	AISI 304
06	BODY BOLT	4/6/8	CARBON STEEL	AISI 304	AISI 304
05	SEAT	02	P.T.F.E.	P.T.F.E.	P.T.F.E.
04	BODY GASKET	01	P.T.F.E.	P.T.F.E.	P.T.F.E.
03	BALL	01	AISI 304 / CF8	AISI 304 / CF8	AISI 316 / CF8M
02	FLANGE END	01	ASTM A216 GR WCB	ASTM A 351 GR CF8	ASTM A 351 GR CF8M
01	BODY	01	ASTM A216 GR WCB	ASTM A 351 GR CF8	ASTM A 351 GR CF8M

SIZES		A	B	C Ø	D	E	F	GØ	HØ
$\frac{1}{2}$"	15	108	11.5	12.7	43	65	120	89	12.7
$\frac{3}{4}$"	20	118	13	19	43	65	120	98.4	12.7
1"	25	127	11.5	25.4	47	70	150	108	19
$1\frac{1}{2}$"	40	165	14.5	37.5	68	84	175	127	31.8
2"	50	178	16	50	73	94	225	152.4	37.5
$2\frac{1}{2}$"	65	191	17.5	64	91	110	250	178	50
3"	80	203	19	76	100	117	325	190.5	64
4"	100	229	24	99.5	129	145	400	229	75.4
6"	150	267	25.4	148	146	178	400	280	99.5
8"	200	292	28.6	200	212	243	475	343	149

CLASS	TEST	MEDIUM	MIN.	
			PSI	BAR
150	SHELL	HYDROSTATIC	440	31
	SEAT	HYDROSTATIC	300	21
	SEAT	AIR	85	6

DUE TO CONTINUOUS DEVELOPMENT, WE RESERVE THE RIGHT TO CHANGE SPECIFICATIONS WITHOUT NOTICE

UNISON VALVES PVT LTD

TÜV NABCB QM 002

Three Piece Design S/E, S/W, B/W Ball Valve (FB)

Design Standard : IS 9890-1981
Pressure Testing : BS 6755 Part I/API 598/IS 6157-1981
Screwed Dimensions : ANSI B 1.20.1/IS 554/BSEN10226-1
Socket Weld Dimensions: ANSI B 16.11/BS EN ISO 17292/ IS 4712
Butt Weld Dimensions : ANSI B 16.25/BS EN ISO 17292/ IS 11790

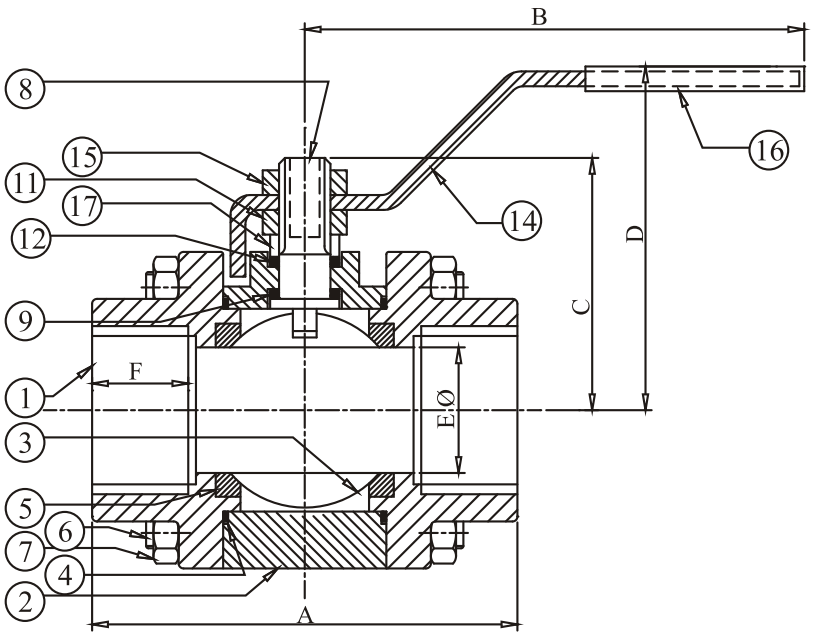

NO.	COMP. NAME	QTY.	MATERIAL OF CONSTRUCTION		
17	GLAND	01	CARBON STEEL	AISI 304	AISI 304
16	SLEEVE	01	P.V.C.	P.V.C.	P.V.C.
15	LEVER NUT	01	CARBON STEEL	AISI 304	AISI 304
14	LEVER	01	CARBON STEEL	S.S / CARBON STEEL	S.S / CARBON STEEL
12	GLAND PACKING	01	P.T.F.E.	P.T.F.E.	P.T.F.E.
11	GLAND NUT	01	CARBON STEEL	AISI 304	AISI 304
09	STEM SEAL	01	P.T.F.E.	P.T.F.E.	P.T.F.E.
08	STEM	01	AISI 304	AISI 304	AISI 316
07	BODY NUT	08	CARBON STEEL	AISI 304	AISI 304
06	BODY STUD	04	CARBON STEEL	AISI 304	AISI 304
05	SEAT	02	P.T.F.E.	P.T.F.E.	P.T.F.E.
04	BODY GASKET	02	P.T.F.E.	P.T.F.E.	P.T.F.E.
03	BALL	01	AISI 304 / CF8	AISI 304 / CF8	AISI 316 / CF8M
02	BODY	01	ASTM A216 GR WCB	ASTM A 351 GR CF8	ASTM A 351 GR CF8M
01	SCREWED END	02	ASTM A216 GR WCB	ASTM A 351 GR CF8	ASTM A 351 GR CF8M

SIZES		A	E Ø	C	D	B	F
1/2"	15	67	12.7	43	64	120	16.5
¾"	20	73	19	47	67	120	18.5
1"	25	86	25.4	51	70	150	21
1 1/4"	32	101	31.8	68	85	175	25
1½"	40	105	37.5	73	88	175	22.5
2"	50	125	50	82	105	225	26.5

PRESSURE TABLE

CLASS	TEST	MEDIUM	MIN.	
			PSI	BAR
150	SHELL	HYDROSTATIC	440	31
	SEAT	HYDROSTATIC	300	21
	SEAT	AIR	85	6

DUE TO CONTINUOUS DEVELOPMENT, WE RESERVE THE RIGHT TO CHANGE SPECIFICATIONS WITHOUT NOTICE

UNISON VALVES PVT LTD

TÜV NABCB QM 002

Three Piece Design Flanged Ball Valve (FB)

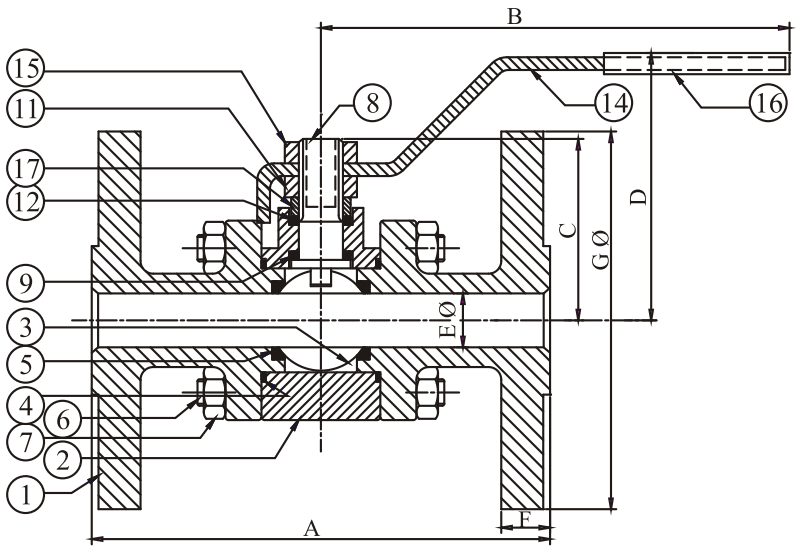

Design Standard : IS 9890 -1981
Pressure Testing : BS 6755 Part I/API 598/IS 6157-1981
Flange Dimensions : ANSI B 16.5
Face to Face : ANSI B 16.10

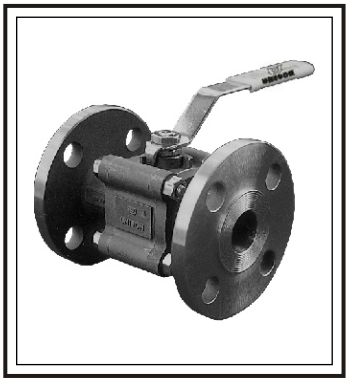

NO.	COMP. NAME	QTY.	MATERIAL OF CONSTRUCTION		
17	GLAND	01	CARBON STEEL	AISI 304	AISI 304
16	SLEEVE	01	P.V.C.	P.V.C.	P.V.C.
15	LEVER NUT	01	CARBON STEEL	AISI 304	AISI 304
14	LEVER	01	CARBON STEEL	S S / CARBON STEEL	S S / CARBON STEEL
12	GLAND PACKING	01	P.T.F.E.	P.T.F.E.	P.T.F.E.
11	GLAND NUT	01	CARBON STEEL	AISI 304	AISI 304
09	STEM SEAL	01	P.T.F.E.	P.T.F.E.	P.T.F.E.
08	STEM	01	AISI 304	AISI 304	AISI 316
07	BODY NUT	08/12	CARBON STEEL	AISI 304	AISI 304
06	BODY STUD	04/06	CARBON STEEL	AISI 304	AISI 304
05	SEAT	02	P.T.F.E.	P.T.F.E.	P.T.F.E.
04	BODY GASKET	02	P.T.F.E.	P.T.F.E.	P.T.F.E.
03	BALL	01	AISI 304 / CF8	AISI 304 / CF8	AISI 316 / CF8M
02	BODY	01	ASTM A216 GR WCB	ASTM A 351 GR CF8	ASTM A 351 GR CF8M
01	FLANGE END	02	ASTM A216 GR WCB	ASTM A 351 GR CF8	ASTM A 351 GR CF8M

SIZES		A	F	EØ	C	D	B	GØ
1/2"	15	108	11.5	12.7	43	64	120	89
3/4"	20	118	11.5	19	47	67	120	98.4
1"	25	127	11.5	25.4	51	70	150	108
1 ¼"	32	140	13	31.8	68	85	175	117.5
1½"	40	165	14.5	37.5	73	88	175	127
2"	50	178	16	50	82	106	225	152.4
2 1/2"	65	191	17.5	64	100	121	250	178
3"	80	203	19	75.4	110	130	325	190.5
4"	100	229	24	99.5	140	156	400	229

CLASS	TEST	MEDIUM	MIN.	
			PSI	BAR
150	SHELL	HYDROSTATIC	440	31
	SEAT	HYDROSTATIC	300	21
	SEAT	AIR	85	6

DUE TO CONTINUOUS DEVELOPMENT, WE RESERVE THE RIGHT TO CHANGE SPECIFICATIONS WITHOUT NOTICE

UNISON VALVES PVT LTD

TÜV NABCB QM 002

Carbon Steel Three Piece Design S/E, S/W, B/W Ball Valve (FB)

Design Standard : IS 9890-1981
Pressure Testing : BS 6755 Part I/API 598/IS 6157-1981
Screwed Dimensions : ANSI B 1.20.1/IS 554/BSEN10226-1
Socket Weld Dimensions: ANSI B 16.11/BS EN ISO 17292/ IS 4712
Butt Weld Dimensions : ANSI B 16.25/BS EN ISO 17292/ IS 11790

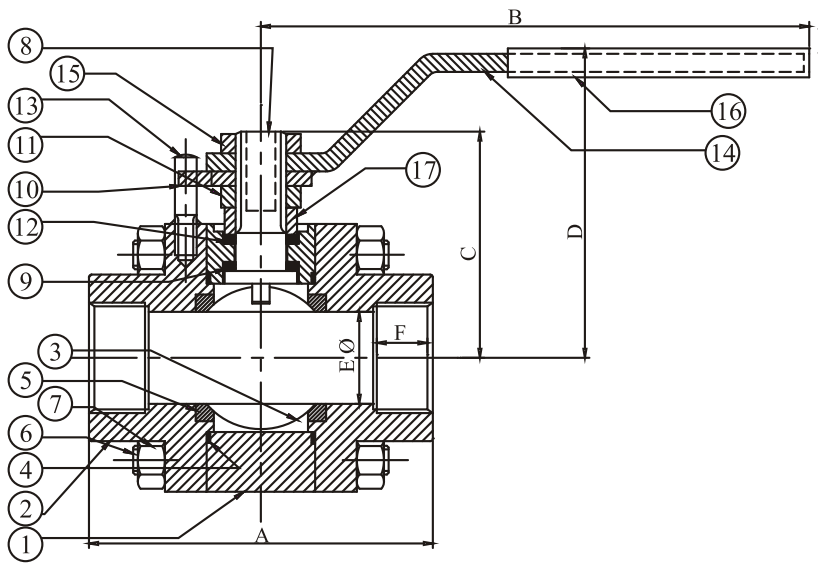

NO.	COMP. NAME	QTY.	MAT.OFCONST.
17	GLAND	01	CARBON STEEL
16	SLEEVE	01	P.V.C.
15	LEVER NUT	01	CARBON STEEL
14	LEVER	01	CARBON STEEL
13	STOP PIN	01	CARBON STEEL
12	GLAND PACKING	01	P.T.F.E.
11	GLAND NUT	01	CARBON STEEL
10	LEVER STOP PLATE	01	CARBON STEEL
09	STEM SEAL	01	P.T.F.E.
08	STEM	01	AISI 304
07	BODY NUT	08/12	CARBON STEEL
06	BODY STUD	04/06	CARBON STEEL
05	SEAT	02	P.T.F.E.
04	BODY GASKET	02	P.T.F.E.
03	BALL	01	AISI 304 / CF8
02	SCREWED END	02	CARBON STEEL
01	BODY	01	CARBON STEEL

SIZES		A	B	C	D	EØ	F
1/2"	15	67	120	43	65	12.7	18
¾"	20	73	120	51	73	19	19
1"	25	95	150	63	82	25.4	23
1 1/4"	32	101	175	70	88	31.8	25
1½"	40	116	175	75	92	37.5	25
2"	50	128	225	88	110	50	29
2 1/2"	65	154	250	98	121	64	33
3"	80	170	325	110	132	75.4	35
4"	100	216	400	141	162	99.5	41

CLASS	TEST	MEDIUM	MIN.	
			PSI	BAR
150	SHELL	HYDROSTATIC	440	31
	SEAT	AIR	85	6
	SEAT	HYDROSTATIC	300	21

DUE TO CONTINUOUS DEVELOPMENT, WE RESERVE THE RIGHT TO CHANGE SPECIFICATIONS WITHOUT NOTICE

UNISON VALVES PVT LTD

TÜV NABCB QM 002

Carbon Steel Three Piece Design Flanged Ball Valve (FB)

Design Standard : IS 9890-1981
Pressure Testing : BS 6755 Part I/API 598/IS 6157-1981
Flange Dimensions : ANSI B 16.5
Face to Face : ANSI B 16.10

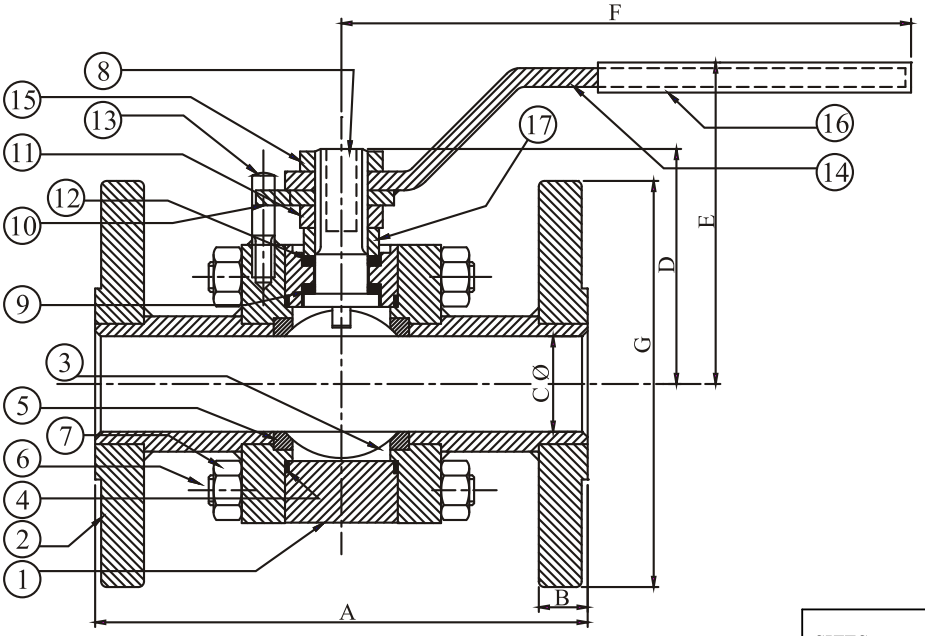

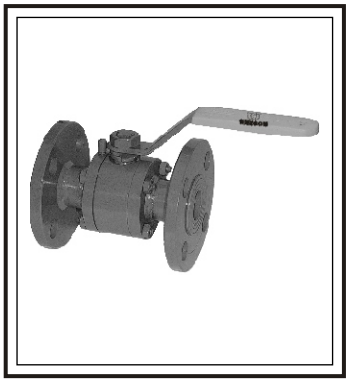

NO.	COMP. NAME	QTY.	MAT.OF CONST.
17	GLAND	01	CARBON STEEL
16	SLEEVE	01	P.V.C.
15	LEVER NUT	01	CARBON STEEL
14	LEVER	01	CARBON STEEL
13	STOP PIN	01	CARBON STEEL
12	GLAND PACKING	01	P.T.F.E.
11	GLAND NUT	01	CARBON STEEL
10	LEVER STOP PLATE	01	CARBON STEEL
09	STEM SEAL	01	P.T.F.E.
08	STEM	01	AISI 304
07	BODY NUT	08/12	CARBON STEEL
06	BODY STUD	04/06	CARBON STEEL
05	SEAT	02	P.T.F.E.
04	BODY GASKET	02	P.T.F.E.
03	BALL	01	AISI 304 / CF8
02	FLANGE END	02	CARBON STEEL
01	BODY	01	CARBON STEEL

SIZES		A	B	C Ø	D	E	F	GØ
½"	15	108	11.5	12.7	43	65	120	89
¾"	20	118	11.5	19	51	73	120	98.4
1"	25	127	11.5	25.4	63	82	150	108
11/4"	32	140	13	31.8	69	88	175	117.5
1½"	40	165	14.5	37.5	74	93	175	127
2"	50	178	15	50	88	110	225	152.4
2½"	65	190	17.5	64	98	121	250	178
3"	80	203	19	75.4	109	132	325	190.5
4"	100	229	24	99.5	141	162	400	229

CLASS	TEST	MEDIUM	MIN.	
			PSI	BAR
150	SHELL	HYDROSTATIC	440	31
	SEAT	HYDROSTATIC	300	21
	SEAT	AIR	85	6

DUE TO CONTINUOUS DEVELOPMENT, WE RESERVE THE RIGHT TO CHANGE SPECIFICATIONS WITHOUT NOTICE

UNISON VALVES PVT LTD

TÜV NABCB QM 002

Three Piece Design Three Way L Port Flanged Ball Valve (RB)

Design Standard : IS 9890-1981
Pressure Testing : BS 6755 Part I/API 598/IS 6157-1981
Flange Dimensions : ANSI B 16.5

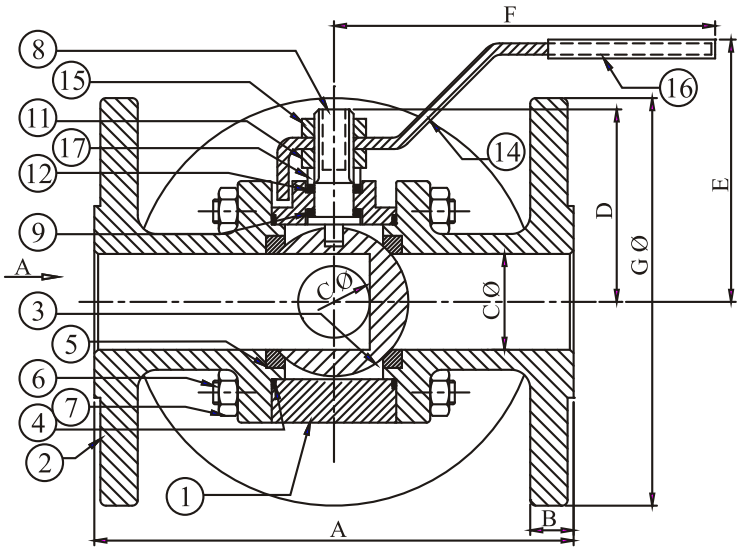

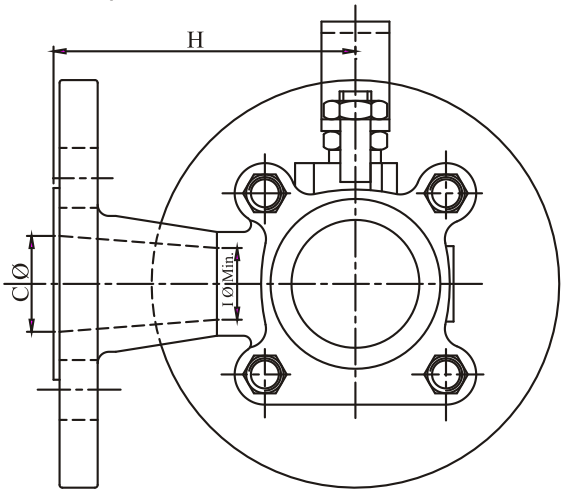

VIEW : A

NO.	COMP. NAME	QTY.	MATERIAL OF CONSTRUCTION		
17	GLAND	01	CARBON STEEL	AISI 304	AISI 304
16	SLEEVE	01	P.V.C.	P.V.C.	P.V.C.
15	LEVER NUT	01	CARBON STEEL	AISI 304	AISI 304
14	LEVER	01	CARBON STEEL	S.S / CARBON STEEL	S.S / CARBON STEEL
12	GLAND PACKING	01	P.T.F.E.	P.T.F.E.	P.T.F.E.
11	GLAND NUT	01	CARBON STEEL	AISI 304	AISI 304
09	STEM SEAL	01	P.T.F.E.	P.T.F.E.	P.T.F.E.
08	STEM	01	AISI 304	AISI 304	AISI 316
07	BODY NUT	08/12	CARBON STEEL	AISI 304	AISI 304
06	BODY STUD	04/6	CARBON STEEL	AISI 304	AISI 304
05	SEAT	02	P.T.F.E.	P.T.F.E.	P.T.F.E.
04	BODY GASKET	02	P.T.F.E.	P.T.F.E.	P.T.F.E.
03	BALL	01	AISI 304 / CF8	AISI 304 / CF8	AISI 316 / CF8M
02	BODY	01	ASTM A216 GR WCB	ASTM A 351 GR CF8	ASTM A 351 GR CF8M
01	FLANGE END	02	ASTM A216 GR WCB	ASTM A 351 GR CF8	ASTM A 351 GR CF8M

SIZES		A	B	C Ø	D	E	F	GØ	H	I Ø Min.
1/2"	15	108	11.5	12.7	43	64	120	89	70	10
¾"	20	118	11.5	19	47	67	120	98.4	76	12.7
1"	25	127	11.5	25.4	51	70	150	108	80	19
1½"	40	165	14.5	37.5	73	88	175	127	98	30
2"	50	178	16	50	82	106	225	152.4	107	38
2 1/2"	65	190	17.5	64	100	121	250	178	125	50
3"	80	203	19	75.4	109	130	325	190.5	133	57

CLASS	TEST	MEDIUM	MIN.	
			PSI	BAR
150	SHELL	HYDROSTATIC	440	31
	SEAT	HYDROSTATIC	145	10
	SEAT	AIR	85	6

DUE TO CONTINUOUS DEVELOPMENT, WE RESERVE THE RIGHT TO CHANGE SPECIFICATIONS WITHOUT NOTICE

UNISON VALVES PVT LTD

TÜV NABCB QM 002

Two Piece Design Long Stem Flanged Ball Valve (RB)

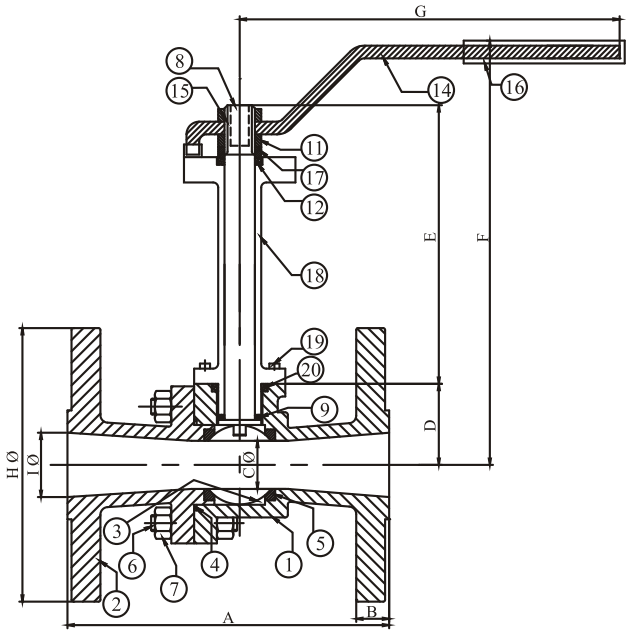

Design Standard : IS 9890-1981
Pressure Testing : BS 6755 Part I/API 598/IS 6157-1981
Flange Dimensions : ANSI B 16.5
Face to Face : ANSI B 16.10

NO.	COMP. NAME	QTY.	MATERIAL OF CONSTRUCTION		
20	BONET SEAL	01	P.T.F.E.	P.T.F.E.	P.T.F.E.
19	BONET SCREW	04	CARBON STEEL	AISI 304	AISI 304
18	BONET	01	WCB/CARBON STEEL	CF8/AISI 304	CF8M/ AISI 316
17	GLAND	01	CARBON STEEL	AISI 304	AISI 304
16	SLEEVE	01	P.V.C.	P.V.C.	P.V.C.
15	LEVER NUT	01	CARBON STEEL	AISI 304	AISI 304
14	LEVER	01	CARBON STEEL	S S / CARBON STEEL	S S / CARBON STEEL
12	GLAND PACKING	01	P.T.F.E.	P.T.F.E.	P.T.F.E.
11	GLAND NUT	01	CARBON STEEL	AISI 304	AISI 304
09	STEM SEAL	01	P.T.F.E.	P.T.F.E.	P.T.F.E.
08	STEM	01	AISI 304	AISI 304	AISI 316
07	BODY NUT	4/6	CARBON STEEL	AISI 304	AISI 304
06	BODY BOLT	4/6	CARBON STEEL	AISI 304	AISI 304
05	SEAT	02	P.T.F.E.	P.T.F.E.	P.T.F.E.
04	BODY GASKET	01	P.T.F.E.	P.T.F.E.	P.T.F.E.
03	BALL	01	AISI 304 / CF8	AISI 304 / CF8	AISI 316 / CF8M
02	FLANGE END	01	ASTM A216 GR WCB	ASTM A 351 GR CF8	ASTM A 351 GR CF8M
01	HOUSING WITH F/E	01	ASTM A216 GR WCB	ASTM A 351 GR CF8	ASTM A 351 GR CF8M

SIZES		A	B	C Ø MIN.	D	E	F	G	HØ	IØ
1/2"	15	108	11.5	12.7	28	110	161	120	89	12.7
3/4"	20	118	13	12.7	28	110	161	120	98.4	19
1"	25	127	11.5	19	32	110	163	150	108	25.4
1½"	40	165	14.5	31.8	40	110	171	175	127	37.5
2"	50	178	16	37.5	45	110	177	225	152.4	50
2 1/2"	65	191	17.5	50	56	110	191	250	178	64
3"	80	203.2	19	64	63.5	110	195	325	190.5	75.4
4"	100	229	24	75.4	84	110	210	400	229	99.5
6"	150	267	25.4	99.5	105	110	230	400	279.4	148

CLASS	TEST	MEDIUM	MIN.	
			PSI	BAR
150	SHELL	HYDROSTATIC	440	31
	SEAT	HYDROSTATIC	300	21
	SEAT	AIR	85	6

DUE TO CONTINUOUS DEVELOPMENT, WE RESERVE THE RIGHT TO CHANGE SPECIFICATIONS WITHOUT NOTICE

UNISON VALVES PVT LTD

TÜV NABCB QM 002

Three Piece Design Tri Clover End Ball Valve

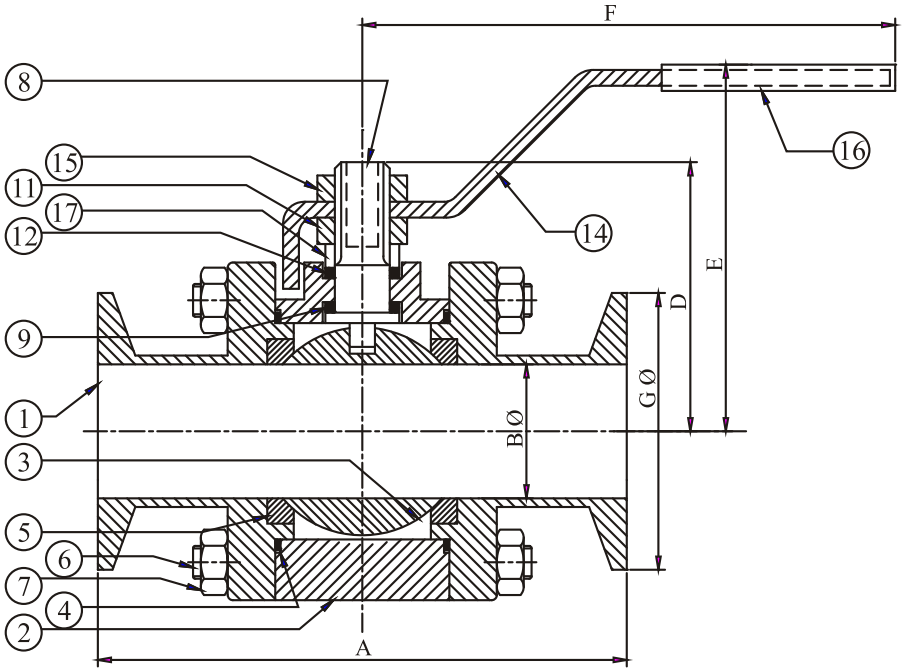

Design Standard : IS 9890 - 1981
Testing Standard : IS 6157 - 1981
: BS 6755 Part 1/ API 598

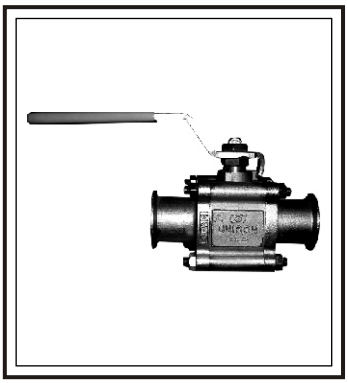

NO.	COMP. NAME	QTY.	MATERIAL OF CONSTRUCTION	
17	GLAND	01	AISI 304	AISI 304
16	SLEEVE	01	P.V.C.	P.V.C.
15	LEVER NUT	01	AISI 304	AISI 304
14	LEVER	01	S S / CARBON STEEL	S S / CARBON STEEL
12	GLAND PACKING	01	P.T.F.E.	P.T.F.E.
11	GLAND NUT	01	AISI 304	AISI 304
09	STEM SEAL	01	P.T.F.E.	P.T.F.E.
08	STEM	01	AISI 304	AISI 316
07	BODY NUT	08	AISI 304	AISI 304
06	BODY STUD	04	AISI 304	AISI 304
05	SEAT	02	P.T.F.E.	P.T.F.E.
04	BODY GASKET	02	P.T.F.E.	P.T.F.E.
03	BALL	01	AISI 304 / CF8	AISI 316 / CF8M
02	BODY	01	ASTM A 351 GR CF8	ASTM A 351 GR CF8M
01	TRI CLOVER END	02	ASTM A 351 GR CF8	ASTM A 351 GR CF8M

SIZES		A	B Ø	D	E	F	GØ
1/2"	15	126	9.4	43	64	120	50.4
¾"	20	125	15.75	47	67	120	50.4
1"	25	130	22.2	51	70	150	50.4
1½"	40	140	34.8	73	88	175	50.4
2"	50	152	47.5	82	103	225	64

CLASS	TEST	MEDIUM	MIN.	
			PSI	BAR
150	SHELL	HYDROSTATIC	440	31
	SEAT	HYDROSTATIC	300	21
	SEAT	AIR	85	6

DUE TO CONTINUOUS DEVELOPMENT, WE RESERVE THE RIGHT TO CHANGE SPECIFICATIONS WITHOUT NOTICE

UNISON VALVES PVT LTD

TÜV NABCB QM 002

Three Piece Design OD Base Ball Valve

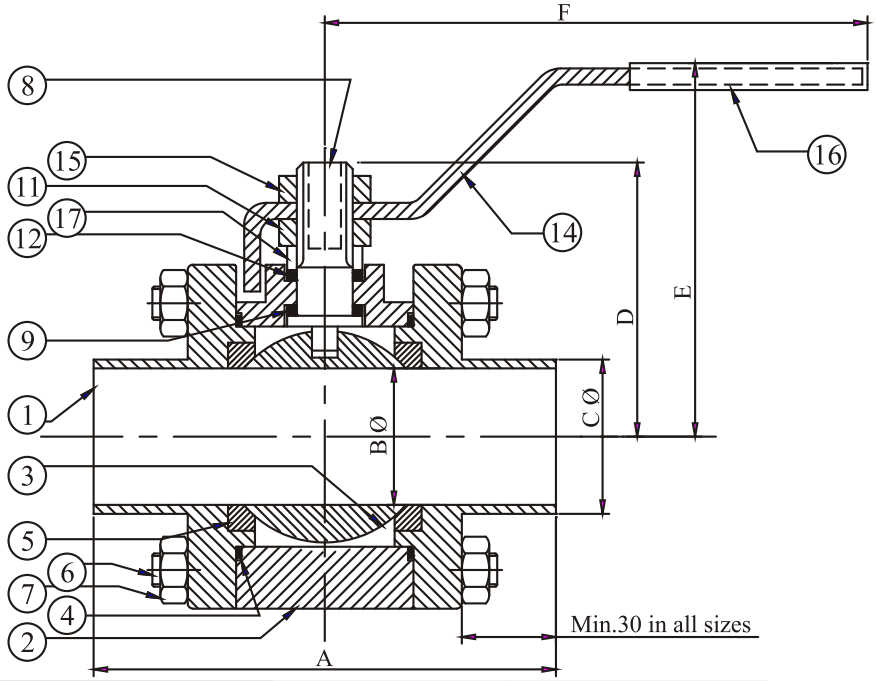

Design Standard : IS 9890 - 1981
Testing Standard : IS 6755 Part1 - 1981
API 598 / IS 6157 - 1981

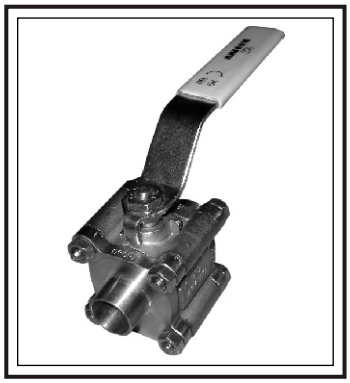

NO.	COMP. NAME	QTY.	MATERIAL OF CONSTRUCTION	
17	GLAND	01	AISI 304	AISI 304
16	SLEEVE	01	P.V.C.	P.V.C.
15	LEVER NUT	01	AISI 304	AISI 304
14	LEVER	01	S S / CARBON STEEL	S S / CARBON STEEL
12	GLAND PACKING	01	P.T.F.E.	P.T.F.E.
11	GLAND NUT	01	AISI 304	AISI 304
09	STEM SEAL	01	P.T.F.E.	P.T.F.E.
08	STEM	01	AISI 304	AISI 316
07	BODY NUT	08	AISI 304	AISI 304
06	BODY STUD	04	AISI 304	AISI 304
05	SEAT	02	P.T.F.E.	P.T.F.E.
04	BODY GASKET	02	P.T.F.E.	P.T.F.E.
03	BALL	01	AISI 304 / CF8	AISI 316 / CF8M
02	BODY	01	ASTM A 351 GR CF8	ASTM A 351 GR CF8M
01	END PIECE	02	ASTM A 351 GR CF8	ASTM A 351 GR CF8M

SIZES		A	B Ø	CØ	D	E	F
1/2"	15	107	9.4	12.7	43	64	120
¾"	20	108	15.75	19.05	47	67	120
1"	25	113	22.2	25.4	51	70	150
1½"	40	127	34.8	38.1	73	88	175
2"	50	139	47.5	50.8	82	103	225

CLASS	TEST	MEDIUM	PRESSURE	
			PSI	BAR
150	SHELL	HYDROSTATIC	440	31
	SEAT	HYDROSTATIC	300	21
	SEAT	AIR	85	6

DUE TO CONTINUOUS DEVELOPMENT, WE RESERVE THE RIGHT TO CHANGE SPECIFICATIONS WITHOUT NOTICE

UNISON VALVES PVT LTD

TÜV NABCB QM 002

Pneumatically Actuated Ball Valve

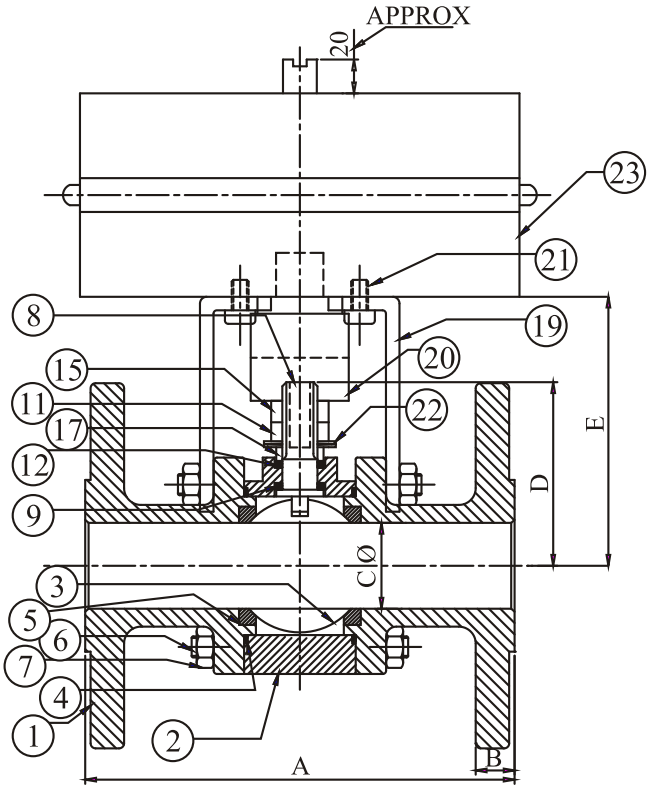

Design Standard : IS 9890-1981
Pressure Testing : BS 6755 Part I/API 598/IS 6157-1981
Flange Dimensions : ANSI B 16.5
Face to Face : ANSI B 16.10
Screwed Dimensions : ANSI B 1.20.1/IS 554/BSEN10226-1
Socket Weld Dimensions : ANSI B 16.11/BS EN ISO 17292/ IS 4712
Butt Weld Dimensions : ANSI B 16.25/BS EN ISO 17292/ IS 11790

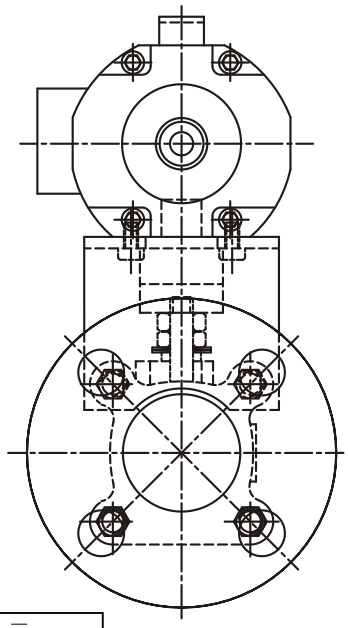

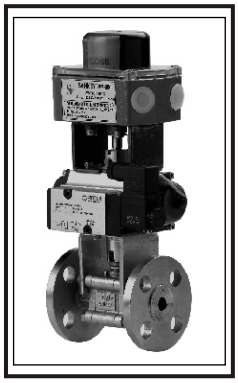

NO.	COMP. NAME	QTY.	MATERIAL OF CONSTRUCTION		
23	PNEUMATIC ACTUATOR	01	—	—	—
22	DISC SPRING	02	SPRING STEEL	SS	SS
21	ALLEN SCREW	04	CARBON STEEL	AISI 304	AISI 304
20	ADAPTOR	01	AISI 304	AISI 304	AISI 304
19	BRACKET	02	CARBON STEEL	AISI 304	AISI 304
17	GLAND	01	CARBON STEEL	AISI 304	AISI 304
15	GLAND LOCK NUT	01	CARBON STEEL	AISI 304	AISI 304
12	GLAND PACKING	01	P.T.F.E.	P.T.F.E.	P.T.F.E.
11	GLAND NUT	01	CARBON STEEL	AISI 304	AISI 304
09	STEM SEAL	01	P.T.F.E.	P.T.F.E.	P.T.F.E.
08	STEM	01	AISI 304	AISI 304	AISI 316
07	BODY NUT	08/12	CARBON STEEL	AISI 304	AISI 304
06	BODY STUD	04/6	CARBON STEEL	AISI 304	AISI 304
05	SEAT	02	P.T.F.E.	P.T.F.E.	P.T.F.E.
04	BODY GASKET	02	P.T.F.E.	P.T.F.E.	P.T.F.E.
03	BALL	01	AISI 304 / CF8	AISI 304 / CF8	AISI 316 / CF8M
02	BODY	01	ASTM A216 GR WCB	ASTM A 351 GR CF8	ASTM A 351 GR CF8M
01	FLANGE END	02	ASTM A216 GR WCB	ASTM A 351 GR CF8	ASTM A 351 GR CF8M

Note : Minimum air pressure to the actuator is 5 kg/cm2.

SIZES		A		B	CØ	D	E
		S/E	F/E				
1/2"	15	67	108	11.5	12.7	43	66
¾"	20	73	118	11.5	19	47	69
1"	25	86	127	11.5	25.4	51	72
1¼ "	32	101	140	13	31.8	68	83
1½"	40	105	165	14.5	37.5	73	86.5
2"	50	125	178	16	50	82	102
2 1/2"	65		190	17.5	64	100	118.5
3"	80		203	19	75.4	109	127
4"	100		229	24	99.5	140	160.5

CLASS	TEST	MEDIUM	PRESSURE	
			PSI	BAR
150	SHELL	HYDROSTATIC	440	31
	SEAT	HYDROSTATIC	300	21
	SEAT	AIR	85	6

DUE TO CONTINUOUS DEVELOPMENT, WE RESERVE THE RIGHT TO CHANGE SPECIFICATIONS WITHOUT NOTICE

UNISON VALVES PVT LTD

TÜV NABCB QM 002

A105 Three piece Design Forged Steel Ball Valve F/B & R/B in SE & SW

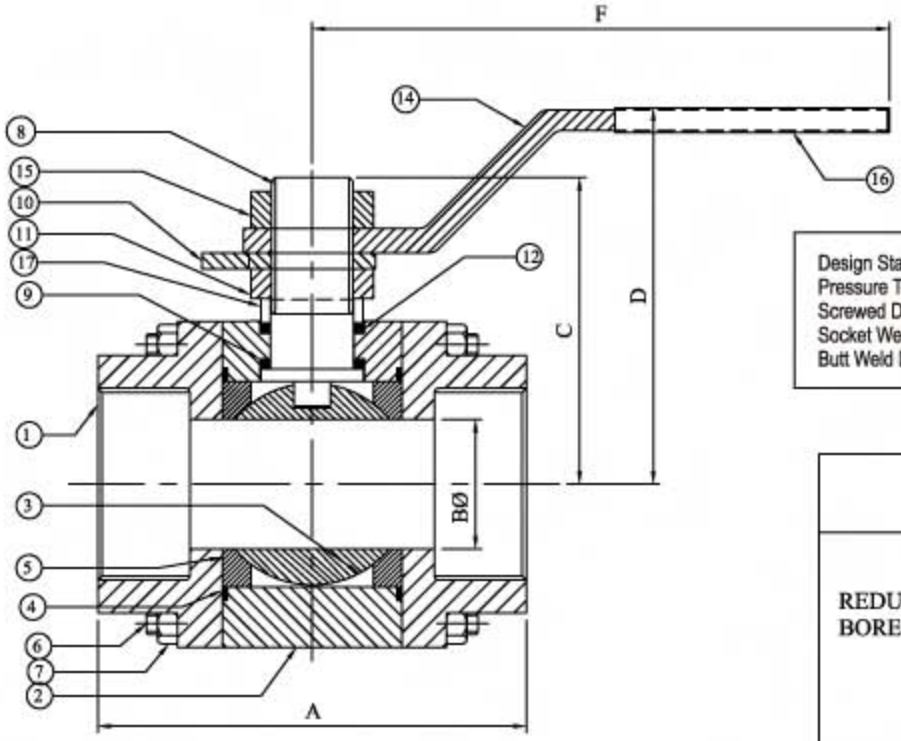

Design Standard	: IS 9890-1981
Pressure Testing	: BS 6755 Part I/API 598/IS 6157-1981
Screwed Dimensions	: ANSI B 1.20.1/IS554/BSEN10226-1
Socket Weld Dimensions	: ANSI B 16.25/IS4712/BSENISO17292
Butt Weld Dimensions	: ANSI B 16.25/IS11790/BSENISO17292

	PARAMETERS / SIZES	A	B Ø	F	C	D
REDUCED BORE	1/2"	67	10	120	42	65
	3/4"	73	12.7	120	43	66
	1"	86	19	150	60	85
	1½"	105	31.8	225	74	95
	2"	125	37.4	225	81	94.5
FULL BORE	3/8"	67	10	120	42	65
	1/2"	67	12.7	120	43	66
	3/4"	80	19	150	61	80
	1"	95	25	150	61	86
	1½"	115	37.4	175	81	103

NO.	COMP. NAME	QTY.	MOC
17	GLAND	01	C.S
16	SLEEVE	01	P.V.C.
15	LEVER NUT	01	C.S
14	LEVER	01	C.S
12	GLAND PACKING	01	P.T.F.E.
11	GLAND NUT	01	C.S
10	LEVER STOP PLATE	01	C.S
09	STEM SEAL	01	P.T.F.E.
08	STEM	01	AISI 304
07	BODY NUT	08	AISI 304
06	BODY STUD	04	AISI 304
05	SEAT	02	P.T.F.E.
04	BODY GASKET	02	P.T.F.E.
03	BALL	01	AISI 304/CF8
02	BODY	01	A 105
01	SCREWED END	02	A 105

PRESSURE TABLE

CLASS	TEST	MEDIUM	PRESSURE	
			PSI	BAR
ASA 800	SHELL	HYDROSTATIC	2980	210
	SEAT	HYDROSTATIC	2170	153
	SEAT	AIR	85	6

DUE TO CONTINUOUS DEVELOPMENT, WE RESERVE THE RIGHT TO CHANGE SPECIFICATIONS WITHOUT NOTICE

UNISON VALVES PVT LTD

TÜV NABCB QM 002

Thermodynamic Steam Trap

Energy & Fuel Conservers

UNISON US - 55

ALSO AVAILABLE WITH IBR APPROVAL

- Streamlined & compact.
- All stainless steel construction for corrosive resistance.
- High resistance to waterhammer.
- Long life due to hardened working parts.
- Only one moving part, therefore minimal maintenance.
- Efficient operation under varying loads and pressures.
- Discharges condensate at steam temperature, to prevent waterlogging.
- All mating parts have metal to metal seating thereby eliminating sealing material.
- Non - IBR trap can also be supplied with blow-down valve screwed directly below the strainer unit.

US - 55 DIMENSIONS

(APPROXIMATE) IN MILLIMETERS

SIZE	A	B (MAX)	C	WEIGHT APP. KG.
1/2" & 3/4"	91.5	48.0	75.0	0.9
1"	105	52	90	1.5

SIZE : 15, 20 & 25 MM.NB

RANGE : MAX. 32 BAR AT 425ºC SCREWED ENDS
MAX. 44 BAR AT 450ºC SOCKET WELDED ENDS

CONNECTIONS: SCREWED BSPT OR N.P.T., SOCKET WELDED

M.O.C.

BODY, CAP, DISC. PLUG : AISI 420

STRAINER : AISI 304

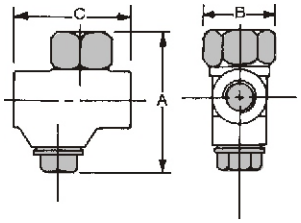

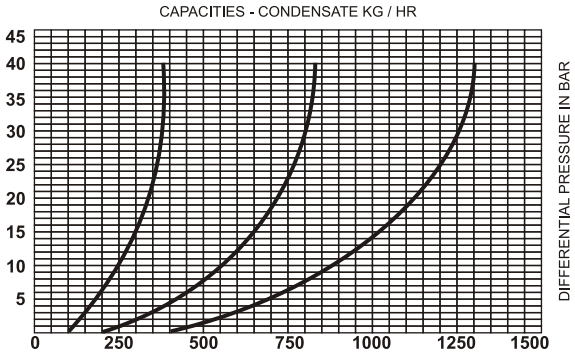

● FOR CONTINUOUS DISCHARGE OF CONDENSATE AT SATURATED STEAM TEMPERATURE. BACK PRESSURE SHOULD NOT EXCEED 50% OF INLET PRESSURE.

GENERAL INFORMATION

Unions or flanges installed on both sides of the trap permits easy maintenance.

The trap should be so placed that it is directly below and as close as possible to the equipment being drained.

It is advisable to install the trap with the disc in horizontal position instead of vertical position to ensure maximum life.

Sight-glasses should be fitted on the outlet, away from the trap for observing its performance.

Horizontal piping to the trap should be such that it facilitates gravity drainage.

Have a collecting leg of a larger pipe size with a dirt pocket before a trap inlet.

Have a bypass line around the trap, where the equipment cannot be shut-down. A standby trap in the bypass line allows uninterrupted service.

It is advisable to have a larger return line to prevent back pressure build-up.

OPERATING PRINCIPLE

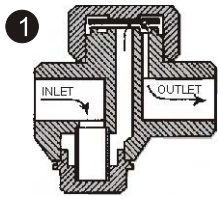

The disc is lifted of its seat by the pressure of condensate or air and flow takes place below the disc to the outlet port, till flashing condensate approaches steam temperature.

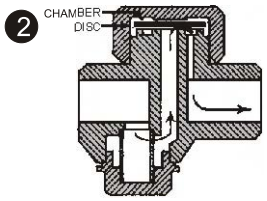

The flow of flash steam below the disc results in a low pressure zone and at the same time builds pressure in the chamber above the disc. The differential pressure forces the disc to the seat resulting in a tight closure.

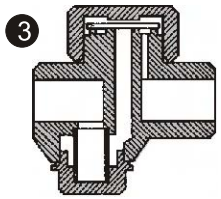

Force acting on the disc, due to steam pressure in the chamber, forces the disc to remain on the seat against the smaller inlet force.

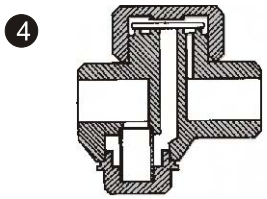

The moment condensate collects below the disc, it reduces heat transfer to the chamber, resulting in steam condensing, which leads to a pressure drop. The higher inlet pressure now forces the disc to rise and the condensate is discharged.

DUE TO CONTINUOUS DEVELOPMENT, WE RESERVE THE RIGHT TO CHANGE SPECIFICATIONS WITHOUT NOTICE

UNISON
VALVES PVT. LTD.

41/3/2, Vadgaon Sheri, Off Pune-Nagar Road,
Pune - 411 014. (INDIA) Tel.: 020-27030741 / 27032877 / 27034861 Fax: 020-27037512
E-mail : unisonvalves@gmail.com Website : www.unisonvalves.net

UV: DOC:32 REV:03

Designed & Printed@ANITA PRINTERS 27032848